COMPLAINT MEDIATION CASE STUDY

MICHAEL COLOZZI / JEFFREY LOCKE
FIELD OPERATIONS AND ENFORCEMENT DIVISION

BAR ADVISORY GROUP MEETING

JANUARY 26, 2023

AUTO BODY REPAIR COMPLAINT (1 OF 2)

- Introduction
  - BAR receives complaints from consumers regarding difficulties encountered with auto body and collision repairs.
  - Complaints range from dissatisfaction with minor cosmetic repairs to concerns with major collision repairs. Some complaints involve vehicle restoration and custom fabrication facilities.
  - Many collision repairs require that facilities follow specific manufacturer repair procedures for air conditioning, windshields, and structural repairs.

AUTO BODY REPAIR COMPLAINT (2 OF 2)

- In the case study being presented, BAR addressed the following:
  - Consumer allegations
  - Vehicle inspection
  - Consumer complaint
  - Vehicle reinspection
  - Complaint resolution
  - Compliance and education

CONSUMER ALLEGATIONS

- BAR received a request for an auto body inspection filed by a consumer on the Bureau's public website at www.bar.ca.gov.
- The Auto Body Inspection Program provides consumers with an option for a no-cost inspection of auto body or collision repairs.
- In this case study, the consumer suspected that the vehicle was not repaired to pre-accident condition because of visible workmanship concerns.
- Consumer's vehicle was a 2016 Chevrolet Camaro.

AUTO BODY INSPECTION (1 OF 7)

- BAR compared the repairs performed to the subject facility invoice provided by the consumer.
  - The inspection found uneven body gaps between the trunk lid and quarter panels.
  - The trunk lid was difficult to close and positioned higher than both quarter panels when latched.
  - The taillamps were uneven and obstructing closure of the trunk lid.
  - The rear body panel was replaced but exposed bare metal was left behind on the underside of the panel.
- BAR advised the consumer of these findings and took photographs of the deficiencies.

AUTO BODY INSPECTION (2 OF 7)

This photograph shows the left side of the trunk lid resting higher than the quarter panel when latched.

AUTO BODY INSPECTION (3 OF 7)

This photograph shows the right side of the trunk lid resting higher than the quarter panel when latched.

AUTO BODY INSPECTION (4 OF 7)

This photograph shows the left tail lamp assembly and trunk lid with substandard body gaps.

AUTO BODY INSPECTION (5 OF 7)

This photograph shows the right tail lamp assembly and trunk lid with substandard body gaps.

AUTO BODY INSPECTION (6 OF 7)

This photograph shows the right tail lamp assembly and trunk lid with substandard body gaps.

AUTO BODY INSPECTION (7 OF 7)

This photograph shows the back side of the lower left rear body panel with witness marks of exposed bare metal welds.

CONSUMER COMPLAINT

- As a result of BAR's findings during the Auto Body Inspection, the consumer chose to file a complaint against the subject facility.
- BAR made a field visit at the subject facility to discuss the complaint and was provided with records for the consumer's repairs to verify the findings.
- The facility was informed about the consumer's allegations and BAR's inspection.
- As a result, the facility requested that the consumer return the vehicle, so the rear body panel installation could be reinspected.

VEHICLE REINSPECTION (1 OF 3)

- The consumer agreed to the reinspection at the subject facility.
- The consumer authorized the facility to remove the rear bumper cover, reinforcement bar, and taillamps.
- BAR found that the rear body panel was not welded, or weld bonded, to the right and left rear frame rail ends, as required by the vehicle manufacturer's published installation procedure.
- The same procedure described the application of anti-corrosion materials to welded or weld bonded areas, and 3-dimensional measuring equipment is required to examine the new rear body panel during installation.

VEHICLE REINSPECTION (2 OF 3)

- The facility acknowledged that 3-dimensional measuring equipment was not used to verify that measuring points for the rear frame rails and body panel were within manufacturer specifications.
- BAR reviewed these installation procedures with the facility and took photographs of the ongoing deficiencies.

VEHICLE REINSPECTION (3 OF 3)

- The facility acknowledged that 3-dimensional measuring equipment was not used to verify that measuring points for the rear frame rails and body panel were within manufacturer specifications.
- BAR reviewed these installation procedures with the facility and took photographs of the ongoing deficiencies.

ONGOING DEFICIENCIES (1 OF 3)

This photograph shows the rear section of the vehicle inspected with rear components removed.

ONGOING DEFICIENCIES (2 OF 3)

This picture shows a business card fitting between a mating section of the <u>rear</u> body panel and <u>left</u> frame rail end, which requires welding or weld bond.

ONGOING DEFICIENCIES (3 OF 3)

This picture shows a business card fitting between a mating section of the <u>rear</u> body panel and <u>right</u> frame rail end, which requires welding or weld bond

BODY REAR END PANEL REPLACEMENT (1 OF 3)

Vehicle > Body and Frame > Rear Panel > Service and Repair > Removal and Replacement

BODY REAR END PANEL REPLACEMENT

Removal Procedure

Warning: Refer to Approved Equipment for Collision Repair Warning.

Warning: Refer to Foam Sound Deadeners Warning.

Warning: Refer to Battery Disconnect Warning.

1. Disable the SIR system and then disconnect the negative battery cable. Refer to SIR Disabling and Enabling.
2. Remove all related panels and components.
3. Repair as much of the damaged area as possible. Refer to Dimensions - Body.
4. Remove the sealers and anti-corrosion materials from the repair area, as necessary. Refer to Anti-Corrosion Treatment and Repair.
   Note: Record the number and location of welds for installation of the service assembly.
5. Remove all the necessary factory welds (1).

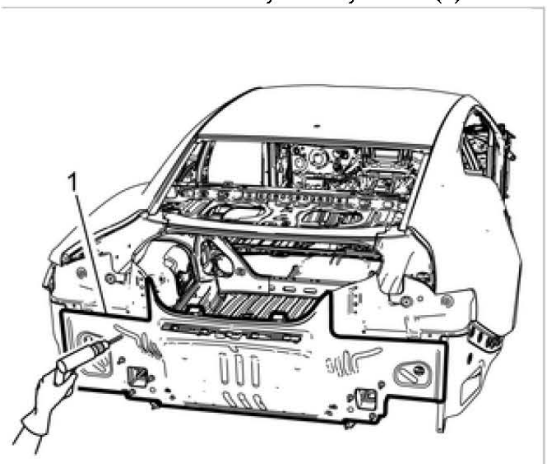

BODY REAR END PANEL REPLACEMENT (2 OF 3)

6. Remove the rear end panel (1).

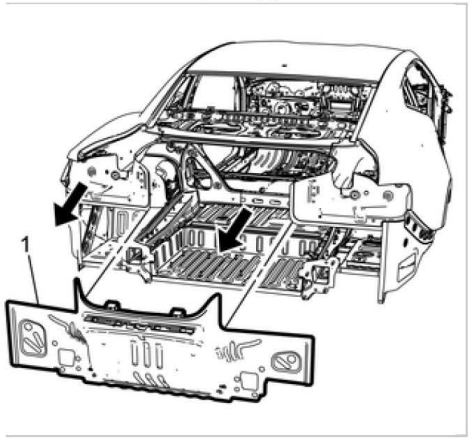

Installation Procedure

1. Clean and prepare all matting surfaces as necessary.

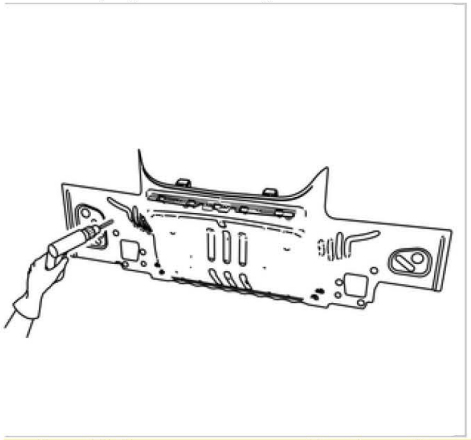

2. Apply Weld-Thru Coating or Panel bonding adhesive to all mating surfaces. Refer to Anti-Corrosion Treatment and Repair or Metal Panel Bonding.
3. Position the rear end panel on the vehicle. Use 3-dimensional measuring equipment to inspect the panel (1).

BODY REAR END PANEL REPLACEMENT (3 OF 3)

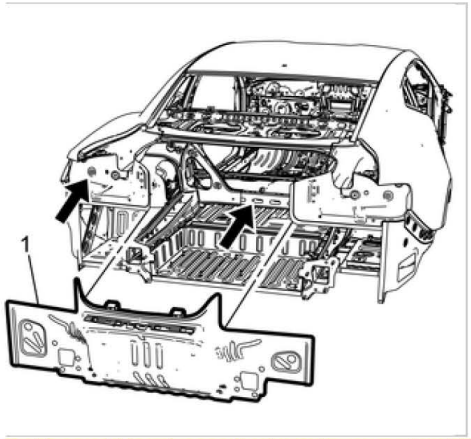

4. Weld or weld bond accordingly at the original weld locations (1).

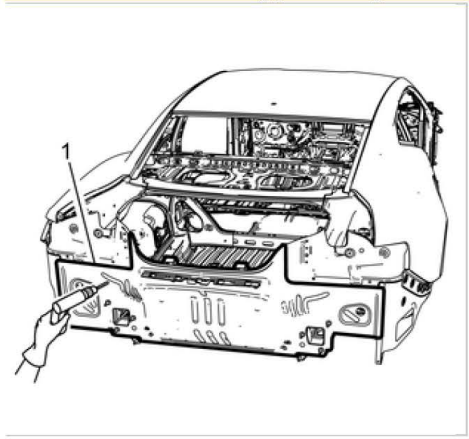

5. Clean all of the welded surfaces.
6. Apply the sealers and anti-corrosion materials to the repair area, as necessary. Refer to Anti-Corrosion Treatment and Repair.
7. Paint the repaired area. Refer to Basecoat/Clearcoat Paint Systems
8. Install all of the related panels and components.
9. Enable the SIR system and then connect the negative battery cable. Refer to SIR Disabling and Enabling.

COMPLAINT RESOLUTION

- As a result of BAR's investigation, the facility offered to perform corrective repairs at no cost to the consumer, totaling $3,484.73.
- These repairs included measuring the frame and installing another rear body panel to correct the uneven body gaps, misaligned trunk lid and taillamps.
- The facility also offered to provide the consumer a rental car during the corrective repair process.
- The consumer accepted these offers to mediate the complaint.

COMPLIANCE AND EDUCATION

- BAR discussed specific Laws and Regulations regarding accepted trade standards for good and workmanlike repairs with the subject facility.
  - Including that repair procedures be performed, and corrosion protection be applied, in accordance with manufacturer's specifications.
- The facility was provided with a link to the latest "Laws and Regulations" on BAR's website.
- Also provided a copy of the "Write It Right" booklet along with a Speaker Request Form offering further education through an in-person "Write It Right" presentation.

QUESTIONS AND COMMENTS

Submit questions and/or comments to:

Michael Colozzi
Bureau of Automotive Repair
10949 North Mather Boulevard
Rancho Cordova, CA 95670
Phone: (916) 403-8080
Email: michael.colozzi@dca.ca.gov

Jeffrey Locke
Bureau of Automotive Repair
10949 North Mather Boulevard
Rancho Cordova, CA 95670
Phone: (916) 403-8080
Email: jeffrey.locke@dca.ca.gov